Insta360 GO 3S

User Manual

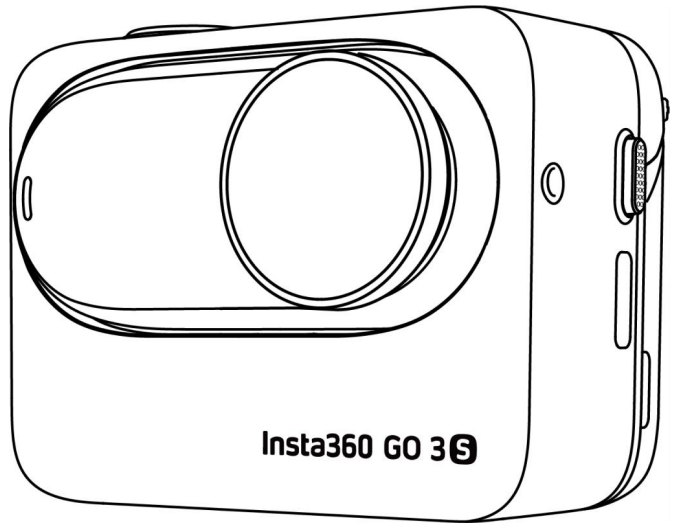

Content

Product Introduction 1

Introduction 1

Standard Accessories 2

First Use 5

Charging 5

Find Your Serial Number 6

Activation 8

Basic Use 9

Action Pod Button Instructions 9

GO 3S Button Instructions 12

Using GO 3 and Action Pod 14

Using the Touchscreen 15

Shooting Mode 17

Shortcut Menu 18

Shooting Specification Settings 20

Shooting Parameter Settings 21

Album Page 23

Apple Find My 24

Indicator Lights 25

Storage 26

GO 3S And GO 3 Action Pod 26

Insta360 App 27

Connect to the Insta360 App 27

Editing 28

Insta360 App 28

Insta360 Studio 28

File Transfer 29

Maintenance 32

Firmware Update 32

Waterproofing 33

Cleaning 34

Product Introduction

Introduction

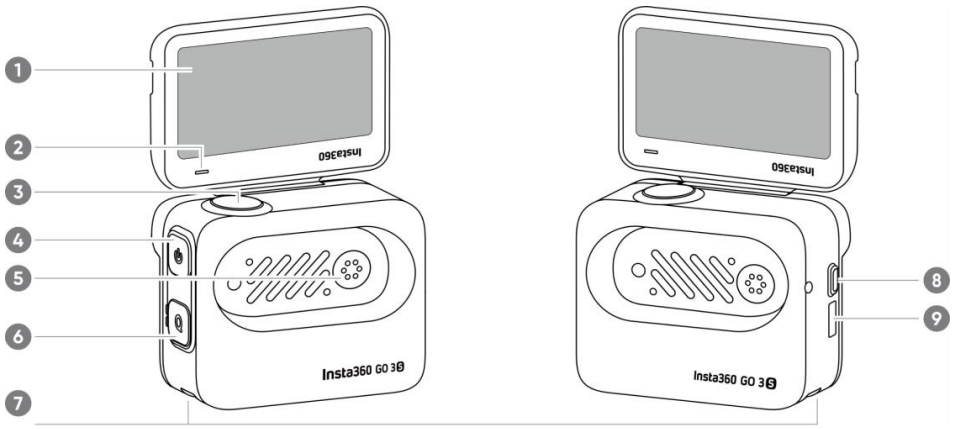

1. Flip Touchscreen
2. Indicator Light
3. Shutter Button
4. Power Button
5. Charging Point
6. Quick Button
7. Mounting Latch
8. Release Switch
9. Type-C Charging Port

1. Microphone
2. Lens
3. GO 3S Button
4. Indicator Light
5. Charging Point
6. Speaker

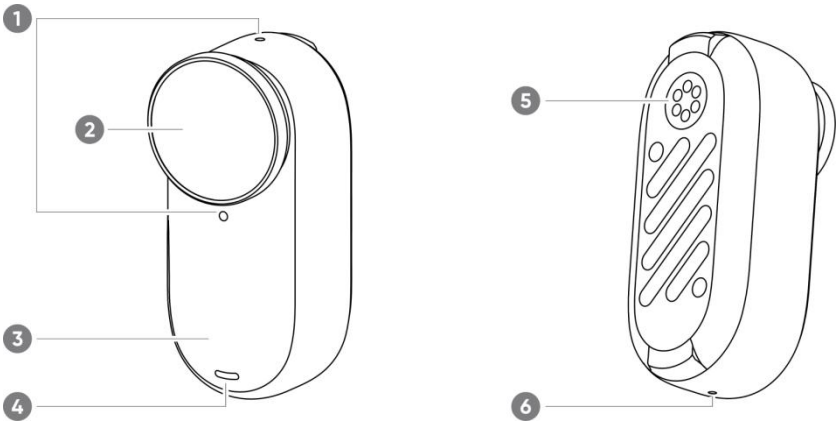

Standard Accessories

GO 3S and the Action Pod can be mounted on different accessories for flexible shooting wherever you go.

Accessories	Description	Figure
Magnet Pendant	**How to Use:** 1. Wear the Magnet Pendant under your clothing, with the camera icon facing outwards. 2. Mount GO 3S horizontally or vertically onto the Magnet Pendant over your clothing. Horizontal mounting gives you a 16:9 aspect ratio, while vertical mounting switches it to 9:16. **Notes:** If you have a pacemaker, do not use this accessory due to its magnetism.	

Pivot Stand	**How to Use:** 1. Screw the Pivot Stand to the sticky base. 2. Press the two buckles on the sides of the Pivot Stand, and mount GO 3S (with or without the Action Pod). Make sure the camera faces in the same direction as the icon on the Pivot Stand. 3. Stick it onto a clean and dry surface (flat or curved). Press and hold for 10 seconds to install securely. 4. The Pivot Stand base can be removed to connect other accessories via the 1/4" mounting point, such as a selfie stick. **Notes:** 1. The sticky base should only be used in 0°C-40°C (32°F-104°F) conditions. It reaches max. strength 30 minutes after application. 2. The sticky base is reusable. Clean it with water and air-dry to reuse.	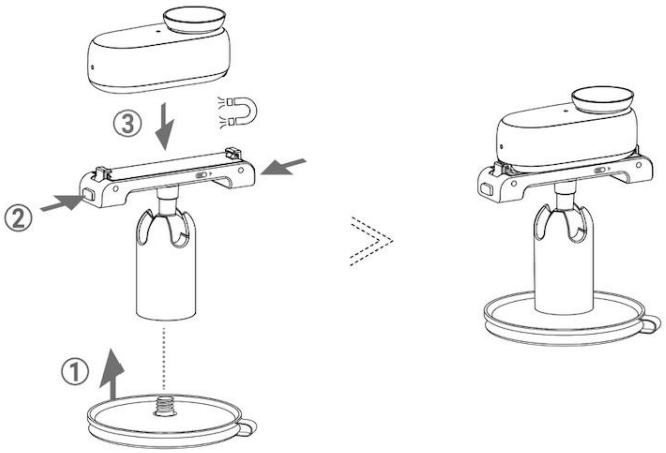 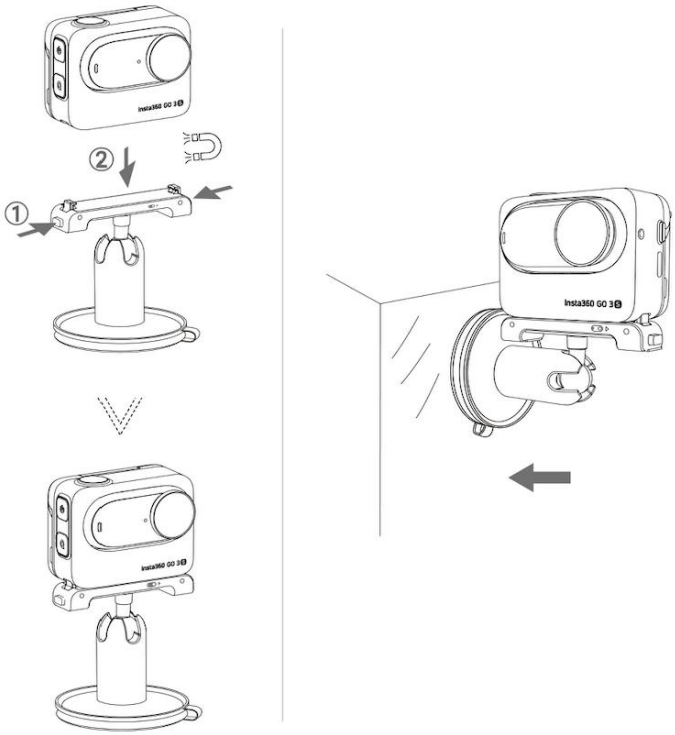

Easy Clip	**How to Use:** 1. Mount GO 3S onto the Easy Clip in the same direction as the icon on the Easy Clip. Make sure it's secure. 2. Attach the Easy Clip to the edge of a hat or other object and adjust it to the desired angle. For flexible angle adjustment, it can also be attached to the Magnet Pendant over your clothes.	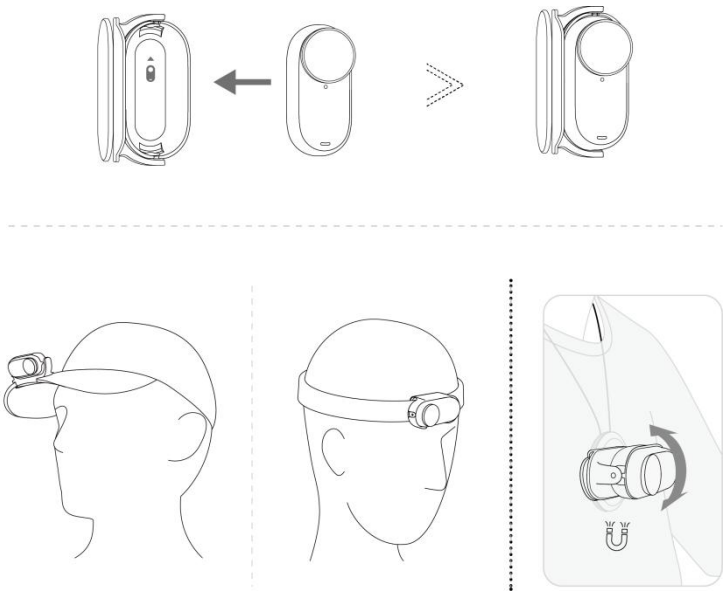

First Use

Charging

Place GO 3S inside the Action Pod and connect the official Type-C cable in the box to the Action Pod. While charging, both the camera and the Action Pod's indicator light will be solid red. The corresponding indicator light will turn off when the device is fully charged. Once both indicator lights turn off, both devices are fully charged.

Notes:

1. Please remove the red sticker on the back of GO 3S before putting it into the Action Pod for the first time.

2. It is recommended that GO 3 be charged using a dedicated charger. If it's connected to a USB port on a computer or other portable power source, the power supply may not be sufficient to charge the camera and Action Pod simultaneously.

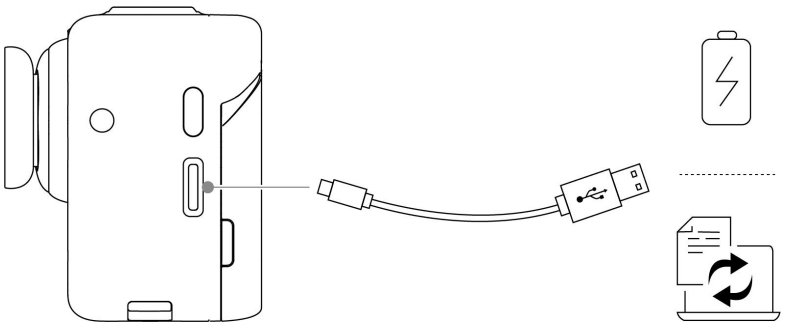

GO 3S Charging Time

23 minutes - 80%

35 minutes - 100%

Action Pod Charging Time

47 minutes - 80%

65 minutes - 100%

Find Your Serial Number

The serial number is a unique code that can be used to quickly identify your camera. You can find the serial number in the following ways:

- **Product Box**

The GO 3S and Action Pod's serial number is on the back of the original product box.

- **Camera settings**

1. Power on your camera.
2. Swipe down on the touchscreen to access the Shortcut Menu, then go to [Settings] > [Camera Info] to view the serial number.

- **Insta360 App**

1. Connect your camera to the Insta360 app.
2. Enter app Settings > [Device Information] to view the serial number.

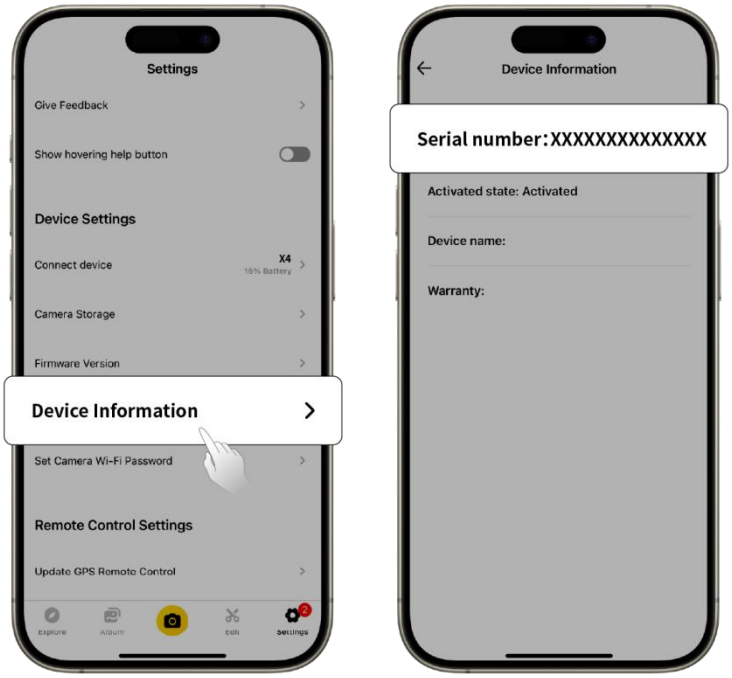

- **Insta360 Studio**

1. Launch Insta360 Studio on your computer and import any footage recorded by the camera.
2. Select the footage and click the info icon on the right side of your screen to access File Properties and view the serial number.

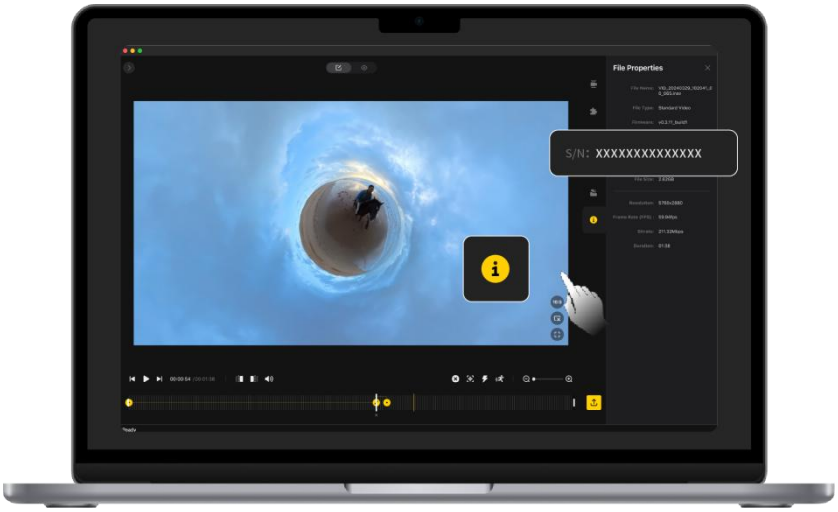

Activation

You need to activate the camera in the Insta360 app before using it for the first time.

Steps:

1. Download the Insta360 app. Alternatively, search "Insta360" in any major app store or scan the QR code on the box.
2. Press the Power Button to turn on the camera.
3. Enable Wi-Fi and Bluetooth on your phone.
4. Open the Insta360 app and tap the camera at the bottom of the page. Select the device you want to connect to in the pop-up window, then follow the on-screen instructions to complete the connection. The name of your camera is "GO 3S ******" by default, where ****** is the last six digits of your camera's serial number. The first time you connect, you will need to confirm the connection on the touchscreen.
5. After successfully connecting the camera, follow the on-screen instructions to activate it. If a new version is available, the app will prompt you to update the firmware. Please follow the on-screen prompts to update the camera's firmware.

Basic Use

Action Pod Button Instructions

Power Button

Camera Status	Operation	Description
Powered off	Press once	• Power on camera.
Powered on	Press once	• Turn the touchscreen on/off. • If GO 3S is not in the Action Pod: Wake up camera.
	Long press	• 3 seconds: Power off.

Quick Button

Camera Status	Operation	Description
Powered on	Press once	• Quickly access preset shooting modes and parameters. Press again to switch between different presets. • The first time you press it, it will default to the Shooting Mode page. Tap the switch icon in the upper left corner to change to the Presets page or customize the Quick Button in Settings.

Shutter Button

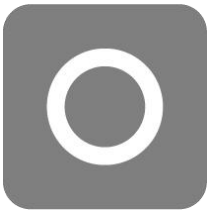

Camera Status	Operation	Description
Powered off	Press once	● Start shooting with QuickCapture. *Must be enabled on the camera first.
Powered on	Press once	● On preview page: ○ Take a photo or start recording a video. ○ Stop recording. ● On other page: ○ Return to the preview page. ○ Confirm connection on the app (when connecting for the first time).
	Long press	● Quickly cancel and delete recording. *Must enable "Long press Shutter Button to cancel recording" first.

GO 3S Button Instructions

Control GO 3S when you take it out of the Action Pod.

Camera Status	Operation	Description
Powered off	Long press	● 3 seconds: Power on.
Powered off	Press once/Double press	● Start shooting with QuickCapture. ○ Press once: Quickly power on the camera and start video recording (by default). ○ Double press: Quickly power on the camera and start recording in FreeFrame Video Mode (by default). *Must be enabled on the camera first. You can customize the default button functions.
Powered on	Press once	● Start shooting with QuickCapture. Press again to stop recording. ● Confirm connection on the app (when connecting for the first time).
	Long press	● 3 seconds: Power off.

GO 3S Camera Button Customization

You can customize the GO 3S buttons according to your preferences through the Action Pod or the app settings page.

- Action Pod

1. Swipe down on the touchscreen and go to Settings.
2. Tap "GO 3S Button Settings" to customize.

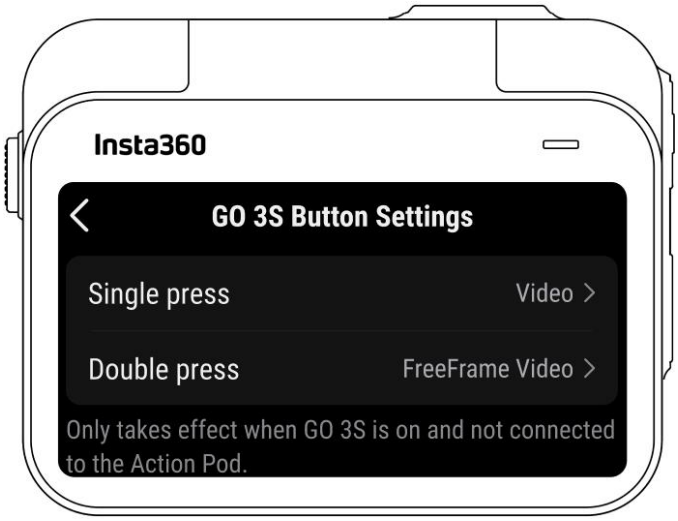

- Insta360 App

1. Connect the camera to the Insta630 app.
2. Go to Settings > Button Settings to customize.

Using GO 3 and Action Pod

- **Using GO 3S and Action Pod together:**

When GO 3S is in the Action Pod, it functions as one action camera, and the GO 3S buttons are disabled. Instead, you can control the camera with the buttons on the Action Pod or via the app.

- **Using them separately:**

When GO 3S is removed from the Action Pod, it can be used for remote control and live preview up to 16ft (5m) away. The GO 3S buttons are enabled.

Note: When using the Action Pod for remote preview, the data is transmitted via Bluetooth and the quality of preview footage is reduced. Remote use will not affect the actual footage.

Using the Touchscreen

The touchscreen's main display shows the current shooting mode. The menu bar shows the battery level, storage capacity, and current shooting parameters. By swiping or tapping the screen, you can achieve the following:

	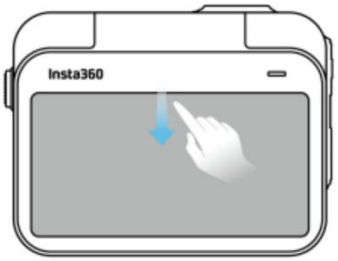	
Tap the screen Hide/show information on the touchscreen.	**Swipe down from the top** View Shortcut Menu.	**Swipe left and right in the center** Switch shooting mode.
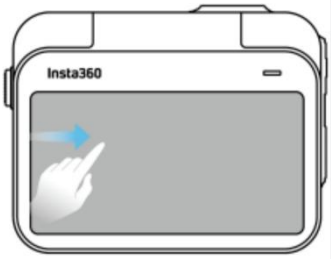	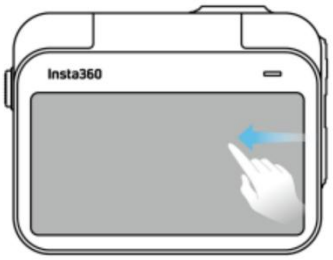	
Swipe from the left Enter the album page.	**Swipe from the right** Enter shooting parameter settings.	**Swipe up from the bottom** More shooting parameter settings.

Shooting Interface

1. **Storage:** Shows the remaining number of photos or the length of video footage that can be stored on the microSD card.
2. **GO 3S Battery Status:** Current battery level of GO 3S.
3. **Action Pod Battery Status:** Current battery level of Action Pod.
4. **Tilt Fix:** Turn on/off.
5. **Shooting Mode:** Tap the icon and swipe to select a different shooting mode.
6. **Shooting Specifications:** Current shooting mode settings.
7. **Field of View:** Change the Field of View.
8. **Clarity Zoom:** Toggle between 1-2x focus, long press to slide zoom.
9. **Jitter Blur Reduction:** Automatically turns on in low light environments to improve motion blur and enhance image stabilization. If the lighting is too dark, the brightness of the image will decrease, and anti flickering will be ineffective.

Shooting Mode

Tap the shooting mode icon and swipe or swipe left and right from the center of the screen to select a different shooting mode.

Shooting Mode	Description
Photo	Take a single photo. Suitable for most scenes.
Video	Record regular HD video up to 4K. Suitable for most scenes.
FreeFrame Video	Shoot a video with the option to choose your aspect ratio after recording. FlowState Stabilization and Horizon Lock applied in post via app or Studio.
Timelapse	Suitable for shooting static timelapse videos.
TimeShift	Take a hyperlapse (sped-up) video while moving.
Slow Motion	Shoot a slow-motion video up to 200fps.
Loop Recording	Record continuously and save only the last fixed-length segment.
Starlapse	Shoot and store multiple photos and automatically combine Starlapse effects.
Interval	The camera automatically takes a photo at a specific time interval.
HDR Photo	Take a photo with a high-dynamic range.

Shortcut Menu

Swipe down on the touchscreen to view the Shortcut Menu.

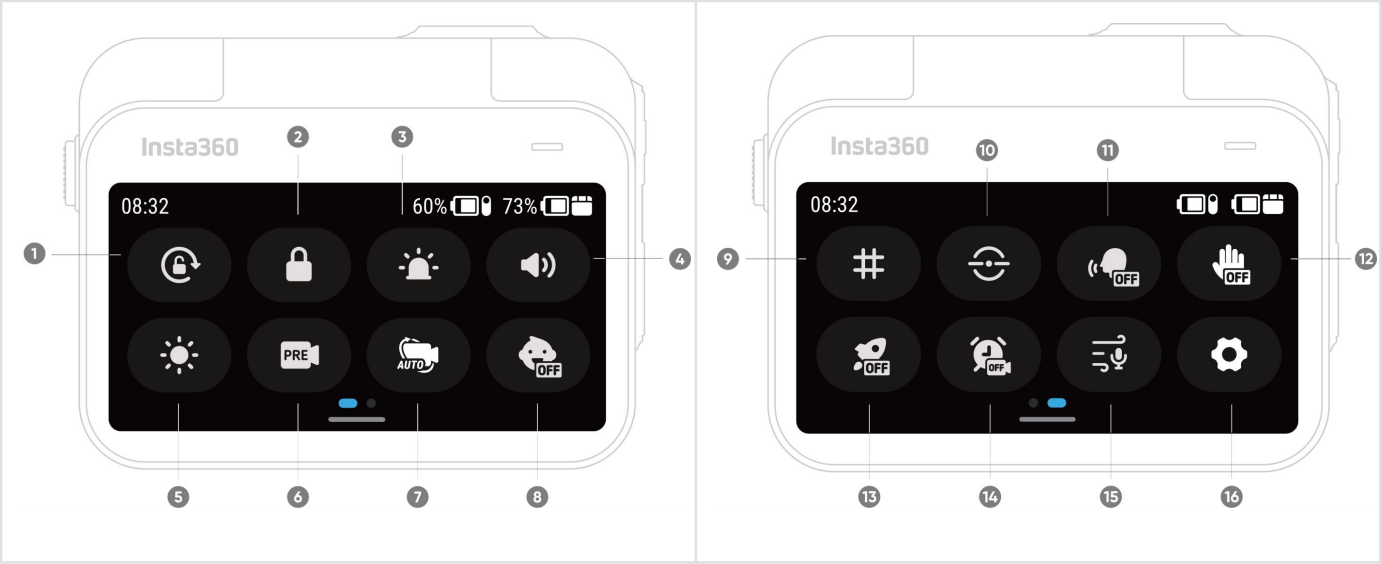

1. Rotation Lock: Turn on/off.
2. Lock Screen: Tap to lock touchscreen. Swipe up on the touchscreen to unlock or press the Power Button while the screen is off to unlock it.
3. Indicator Light Brightness: Set the GO 3S Indicator Light brightness level setting.
4. Prompt Sound: Set the camera speaker volume. There are four options: High, Medium, Low and Mute.
5. Adjust Brightness: Slide the bar to adjust the screen brightness.
6. Pre-recording: Turn on/off. Once enabled, it saves 10-30 seconds of video before you press the Shutter Button. Only supported in Video and FreeFrame Video.
7. Interval Recording: Turn on/off. Once enabled, the camera will automatically power on, start recording and power off at set intervals when the camera is powered off.
8. Kids Mode: Grid: Turn on/off. Suitable when GO 3S is being worn or used by a child. Once enabled, it stops buttons from working to prevent accidental presses, silences prompt sounds and dims the indicator lights.
9. Grid: Turn on/off.
10. Level Indicator: Turn on/off. Once enabled, a horizontal reference line appears on the display so you can easily tell if your shot is level.
11. Voice Control: Turn on/off.

12. Gesture Control: Turn on/off.
13. QuickCapture: Turn on/off. Once enabled, press the Shutter Button when the camera is powered off to turn it on and start recording.
14. Timed Capture: Use the Timed Capture function in the current shooting mode. Only supported in Video, FreeFrame Video, Photo, Interval Photo, and Timelapse mode.
15. Audio Settings: Switch audio mode. Choose between Wind Reduction, Stereo or Direction Focus.
16. Settings: See camera settings.

Shooting Specification Settings

Swipe up from the bottom of the touchscreen to view shooting specification settings.

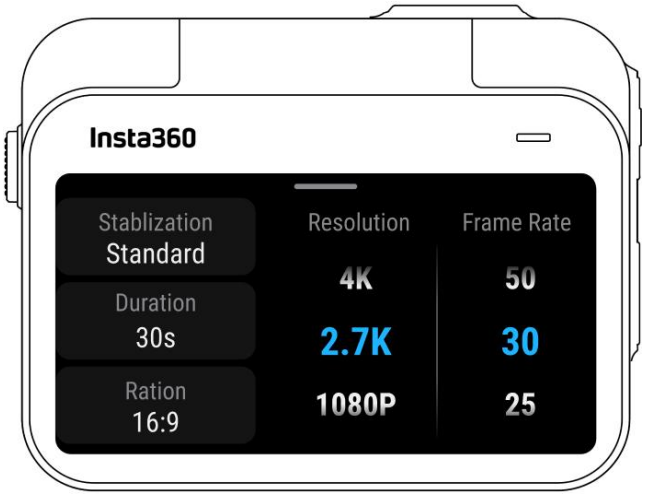

Shooting Mode	Parameters
Photo	Ratio, Format, Timer
Video	Ratio, Resolution, Frame Rate, Stabilization, Duration
FreeFrame Video	Ratio, Resolution, Frame Rate, Duration
Timelapse	Ratio, Interval, Duration
TimeShift	Ratio, Resolution, Frame Rate, Duration
Slow Motion	Ratio, Resolution, Frame Rate, Duration
Loop Recording	Ratio, Loop Duration, Resolution, Frame Rate, Stabilization
Starlapse	Ratio, Format, Timer, Duration
Interval	Ratio, Format, Interval, Duration
HDR Photo	Ratio, Format, Timer

Shooting Parameter Settings

Swipe left from the right edge of the touchscreen to see the shooting parameter settings.

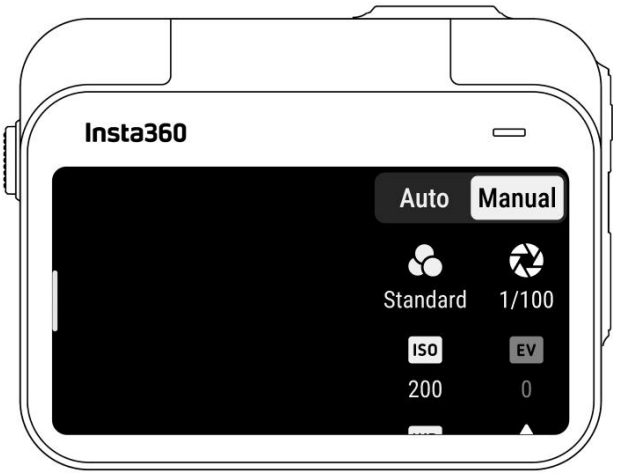

Parameters	Descriptions
Shutter Speed	Controls the time it takes for light to enter the camera. The faster the shutter speed, the clearer the image. Make this higher for dynamic shots and lower for low light conditions.
Sensitivity (ISO)	Reflects how sensitive the sensor is to light. A higher sensitivity means the camera can capture more light for a brighter image.
Exposure Compensation Value (EV)	In Auto Mode, you can adjust the EV to help with overexposure or underexposure.
White Balance (WB)	Removes unrealistic colors and tones so colors are accurately captured in the image. A higher white balance produces warmer tones and lower results in cooler tones.
Jitter Blur Reduction	Improves motion blur and stabilization in low light environments. In extreme environments, the image will be darker and may have some flickering.
Filters	Add different color tones and effects.

Metering Mode	Face Priority prioritizes the face for brightness. Matrix ensures accurate exposure of the whole image.
Sharpness	Adjusts the video screen's clarity and the image edges' sharpness.

Shooting Mode	Parameters	
	Auto	Manual
Photo	EV, Metering Mode, WB	Shutter, ISO, WB
Video	Filters, EV, Metering Mode, Low Light Stabilization, WB, Sharpness	Filters, Shutter, ISO, WB, Sharpness
FreeFrame Video	Filters, EV, Metering Mode, Low Light Stabilization, WB, Sharpness	Filters, Shutter, ISO, WB, Sharpness
Timelapse	Filters, EV, WB, Sharpness	Filters, Shutter, ISO, WB, Sharpness
TimeShift	Filters, EV, WB, Sharpness	Filters, Shutter, ISO, WB, Sharpness
Slow Motion	EV, WB, Sharpness	Shutter, ISO, WB, Sharpness
Loop Recording	Filters, EV, Metering Mode, Low Light Stabilization, WB, Sharpness	Filters, Shutter, ISO, WB, Sharpness
Starlapse	EV, WB	Shutter, ISO, WB
Interval	EV, WB	Shutter, ISO, WB
HDR Photo	WB	

Album Page

Swipe right from the left of the touchscreen to enter the Album page.

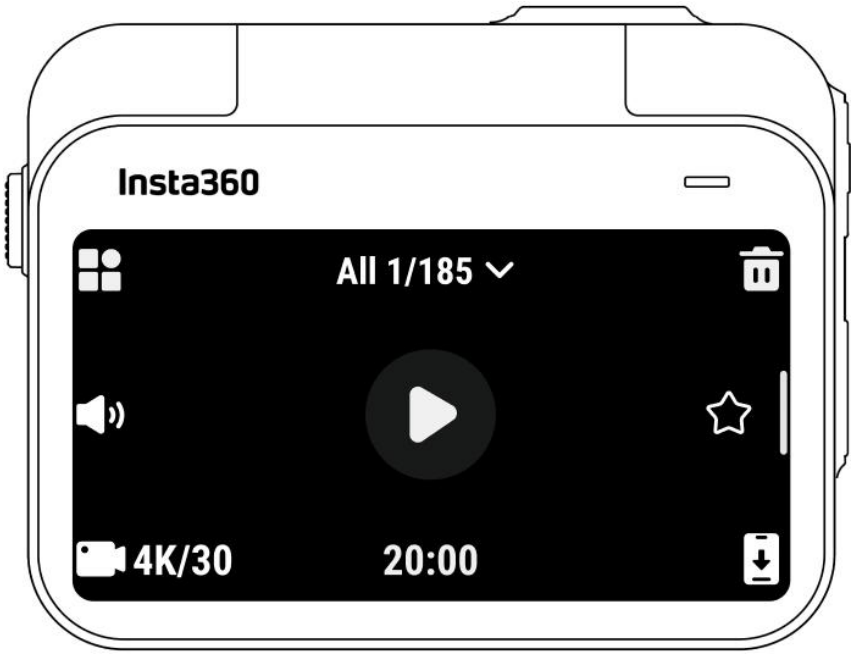

Apple Find My

GO 3S is compatible with Apple Find My, which allows you to quickly relocate your GO 3S from your Apple device, as long as GO 3S has battery. You need to connect the camera first.

1. Turn on the camera.
2. Select "Apple Find My " in camera settings and tap "Start Pairing".
3. Open the Find My app on your Apple device, connect and add Insta360 GO 3S to your Items.
4. After successfully connecting, you can locate your GO 3S with the Find My app.

Note:

1. Only supports when GO 3S has battery remaining, even if it's powered off.
2. Only supports finding the GO 3S standalone camera, not the Action Pod.
3. Only available for Apple devices with the Find My app.

Indicator Lights

The camera has two LED Indicator Lights, one on the GO 3S body and one on the Action Pod. Both display the same information. You can turn the indicator lights on/off in Settings > General.

Camera Status	GO 3S Indicator Light Status	Action Pod Indicator Light Status
Power on	Solid cyan	Solid blue during startup, then solid cyan
Standby Standby (charging) Standby (fully charged) Pre-recording U-Disk Mode	Solid cyan	Solid cyan
Power off	Flashing cyan five times	Flashing cyan five times
Charging (powered off)	Solid red (turns off when fully charged)	Solid red (turns off when fully charged)
Recording a video Timelapse	Flashing red	Flashing red
Interval photo	Flashing cyan, lights turn off when taking photo	Flashing cyan, lights turn off when taking photo
Countdown	/	>1s: Flashing cyan <1s: Flashing cyan five times
Updating firmware	Slowly flashing blue	Slowly flashing blue
Insufficient storage	Solid yellow	Solid yellow
Low battery	Flashing yellow three times every 5 seconds	Flashing yellow three times every 5 seconds
Temperature too high	Flashing yellow three times	Flashing yellow three times

Downloading to app	Flashing green	Flashing green
Successfully connected to Quick Reader	Solid green	Solid green
Backing up/Formatting Quick Reader	Flashing green	Flashing green
Issue with Quick Reader i.e., insufficient memory/abnormal backup/formatting failure	Flashing yellow three times	Flashing yellow three times

Storage

Two options are available for the camera's internal storage capacity: 64GB and 128GB. The actual usable space for file storage will be slightly less than the total capacity due to the system occupying some space.

GO 3S And GO 3 Action Pod

The GO 3S standalone camera is compatible with the GO 3 Action Pod (updated to the latest firmware):

1. Place GO 3S into the GO 3 Action Pod.
2. Download or connect to the Insta360 app on the official website to upgrade the GO 3 Action Pod to the latest firmware version.
3. After the upgrade is completed, press and hold the GO 3S button to turn on the device, and wait for GO 3S to connect to the GO 3 Action Pod.
4. After the connection is completed, the camera can be used as normal.

Insta360 App

Connect to the Insta360 App

1. Download the Insta360 app. Alternatively, search "Insta360" in the App Store or Google Play Store to download the Insta360 app.
2. Press the Power Button to turn on the camera.
3. Enable Wi-Fi and Bluetooth on your smartphone.
4. Open the Insta360 app and tap the camera icon at the bottom of the page. Follow the on-screen instructions to activate your camera.
5. If you connect to the Insta360 app for the first time, you need to authorize the connection on the touchscreen or press the Shutter Button.

If you are unable to connect to the app, go to your smartphone's Wi-Fi settings, find your camera , enter the password and return to the app.

Note: You can change the camera's Wi-Fi password on the app settings page.

Still can't connect to the Insta360 App?

1. Check if the Insta360 app has permission for the following: network permission, Bluetooth permission, or local network permission.
2. Check if Wi-Fi is enabled on your camera.
3. Make sure the camera is close enough to the phone.

Editing

You can view and edit your footage in the Insta360 app or Insta360 Studio.

Insta360 App

- **Edit Page**

1. Connect your camera to the Insta360 app.
2. Head to the Edit page. You can open and edit your material in "Create a Video", or use AI to automatically edit your clips with "Auto Edit". Try out the AI templates, themes and effects with FlashCut and Shot Lab for viral videos in seconds.

- **Album Page**

1. Connect the camera to the Insta360 app.
2. Enter the Album page to view all your clips.
3. Open footage and edit it in the player.

Insta360 Studio

1. Download and open Insta360 Studio from the Insta360 website on your computer.
2. Connect your camera to your computer and import your footage.
3. Edit with Studio's extensive tools and library, or use its Abobe Premiere plugin for even more options.

File Transfer

You can download camera files to your phone or computer, then edit and export them using the Insta360 app or Insta360 Studio.

File transfer from camera to phone

Wireless Connection (iOS/Android)

1. Connect the camera to the Insta360 app.
2. Open the app's album page.
3. Tap the top right icon to select the files you want to transfer.
4. Tap the export icon to save it to your phone's album.
5. Do not exit the app or lock your phone while exporting. Tap the download icon to download the files to the app's gallery.

If your camera can't connect to the Insta360 app, try the following:

1. Update the camera and app to the latest version.
2. Check your phone's Wi-Fi settings to see if it's connected. If not, enter the Wi-Fi password and restart your camera and phone before trying again. If it's still not connecting, forget the camera's Wi-Fi network in your phone settings and attempt to reconnect.
3. Make sure the Insta360 app has GPS and Bluetooth permissions enabled. On Android devices, disable WLAN+ or auto-switch Wi-Fi (if available). On iOS devices, go to system settings, select Insta360, and turn on "Local Network."

File transfer from camera to computer

(Mac/Windows)

1. Use the official Type-C cable to connect the camera to your computer.
2. Power on the camera and select 'USB Drive Mode'. Wait for the computer to recognize the camera drive.
3. Open DCIM > Camera01 folder and copy photos/videos from this folder to your computer.

If your camera can't connect to the camera, try the following:

1. Ensure the camera's firmware is up to date.
2. Use the official data cable for transfer, as non-official cables may have compatibility issues.
3. Make sure the camera is powered on.

Transfer files between the Insta360 app and your Mac

iPhone

1. Connect your iPhone to your Mac.
2. In the Finder window on your Mac, select your iPhone.
3. At the top of the Finder window, click Files, then do one of the following:
   - Transfer from Mac to iPhone: Create a new folder and name it IMPORT on your desktop. Drag your files to the IMPORT folder and then into the Insta360 app folder on your device.
   - Transfer from iPhone to Mac: Click the small triangle beside the Insta360 app to see the DCIM folder, then drag the desired files to a folder on your Mac.

Notes:

- The folder must be named IMPORT with capital letters.
- You may not be able to see the transfer progress. Please wait patiently for it to finish.
- After transferring, restart the Insta360 app on your phone to see the files.

Android

1. Install Android File Transfer on your Mac.
2. Connect your phone to the Mac and open Android File Transfer.
3. Find "data > com.arashivision.insta360akiko > files > Insta360OneR > galleryOriginal".
4. Browse the files and folders on your Android device, then copy and paste or drag them to a folder on your Mac.

Transfer files between the Insta360 app and your Windows PC

iPhone

1. Install iTunes on your Windows PC. Connect your iPhone to your PC, open iTunes, then complete the authorization process according to the instructions.
2. After successful authorization, click the iPhone icon in the top left corner, and the iPhone's files will appear.
3. Click "File Sharing" and choose "Insta360" from the list. Then do one of the following:
   - Transfer from iPhone to Windows PC: Find the DCIM folder, then click Save. Choose your desired path and click Save.
   - Transfer from Windows PC to iPhone: Create a new folder and name it IMPORT, then copy the photos/videos to the IMPORT folder. Replace the IMPORT folder in the Insta360 app.

Notes:

- The folder must be named IMPORT with capital letters.
- After transferring, restart the Insta360 app on your phone to see the files.

Android

1. Connect your Android phone to your PC. Choose "Manage Files" under "USB Connected" on the phone if required.
2. Click "My Computer/This Computer", find your phone model, and click "Internal Storage".
3. Find "data > com.arashivision.insta360akiko > files > Insta360OneR > galleryOriginal", then do one of the following:
   - Transfer from Android to Windows PC: Copy the folder or files to your PC.
   - Transfer from Windows PC to Android: Copy files to this folder from your PC.

Maintenance

Firmware Update

Firmware updates will be regularly available for the camera to ensure it runs efficiently. Please update to the latest version for optimal results.

Before updating, ensure the camera has at least 20% battery remaining.

Update via Insta360 App:

Connect the camera to the Insta360 app. The app will notify you if a new firmware update is available. Follow the on-screen instructions to update the firmware.

If the camera firmware update fails, check the following and try the update again:

1. Ensure the camera is close to your phone.
2. Keep the Insta360 app running and do not exit or minimize it.
3. Ensure your phone has a strong and stable network connection.

Update via Computer

1. Make sure the camera is powered on.
2. Connect the camera to the computer using the USB Type-C cable and select USB Mode.
3. Download the latest firmware version from the official Insta360 website on your computer.
4. Once the computer has recognized the camera, copy the "Insta360GO3SFW.pkg" file to the camera's root directory.

Note:

1. Do not change the file name.
2. Disconnect the camera from the computer. The camera will automatically power off.
3. Power on the camera and wait a few moments for the firmware update to start. The indicator lights will slowly flash blue.

Waterproofing

1. GO 3S (when taken out of the Action Pod) is waterproof up to 33ft (10m). The included Lens Guard must be installed on the camera for underwater use. Otherwise, the camera will not be waterproof, and the shooting effect will be affected. The Lens Guard is installed by default.
2. The Action Pod is IPX4 water resistant only when GO 3 is installed. It protects against light rain and snow but should not be submerged in water or used for high-velocity water activities, such as action sports during rainy weather, surfing, and waterskiing.
3. For extended underwater use, use the GO 3S Dive Case. With the Dive Case, GO 3S and the Action Pod are waterproof to 197ft (60m).
4. Before using it underwater, ensure the charging points on the back of GO 3S and the Action Pod are not damaged or oxidized.
5. After using the GO 3S (without the Action Pod) in seawater:
   - Rinse the camera with fresh water.
   - Soak it in fresh water for 10 minutes.
   - Dry it with a soft cloth and place it in a ventilated area to dry naturally. Wait until the camera is completely dry before using it again.

To maintain the waterproofing of GO 3S:

- Do not use a hair dryer to dry the camera; it may affect the microphone and speaker and damage the internal waterproofing ability.
- Avoid operating GO 3S for extended periods (>1 hour) outside the recommended temperature range (-4°F to 104°F/-20℃ to 40℃) or in humid environments.
- Do not store the camera in high-temperature or high-humidity environments, and avoid storing it with items such as perfume and cosmetics to avoid contact corrosion.
- Avoid entering water at high speeds, as excessive water impact and pressure may damage the device.
- Try to avoid serious drops and impacts.
- Do not disassemble the camera.

Cleaning

- If foreign objects, such as dirt or hair, are on the Lens Guard, clean it with clean water or use a lens pen, air blower or cloth.
- If the lens contains foreign objects, such as dirt or hair, clean it with a lens pen, air blower or cloth.

Arashi Vision Inc.

ADD: 11th Floor, Building 2, Jinlitong Financial Center, Bao'an District, Shenzhen, Guangdong, China

WEB: www.insta360.com

TEL: 400-833-4360 +1 800 6920 360

EMAIL: service@insta360.com

V1.0